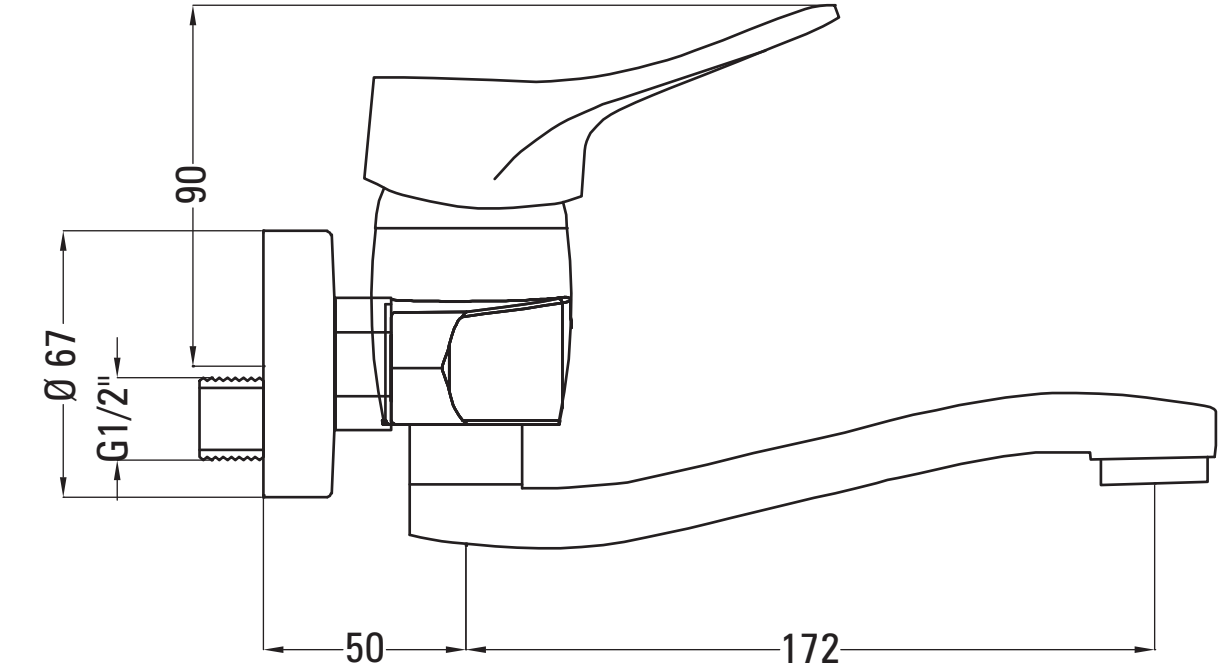
90
Ø 67
G1/2"
50
172

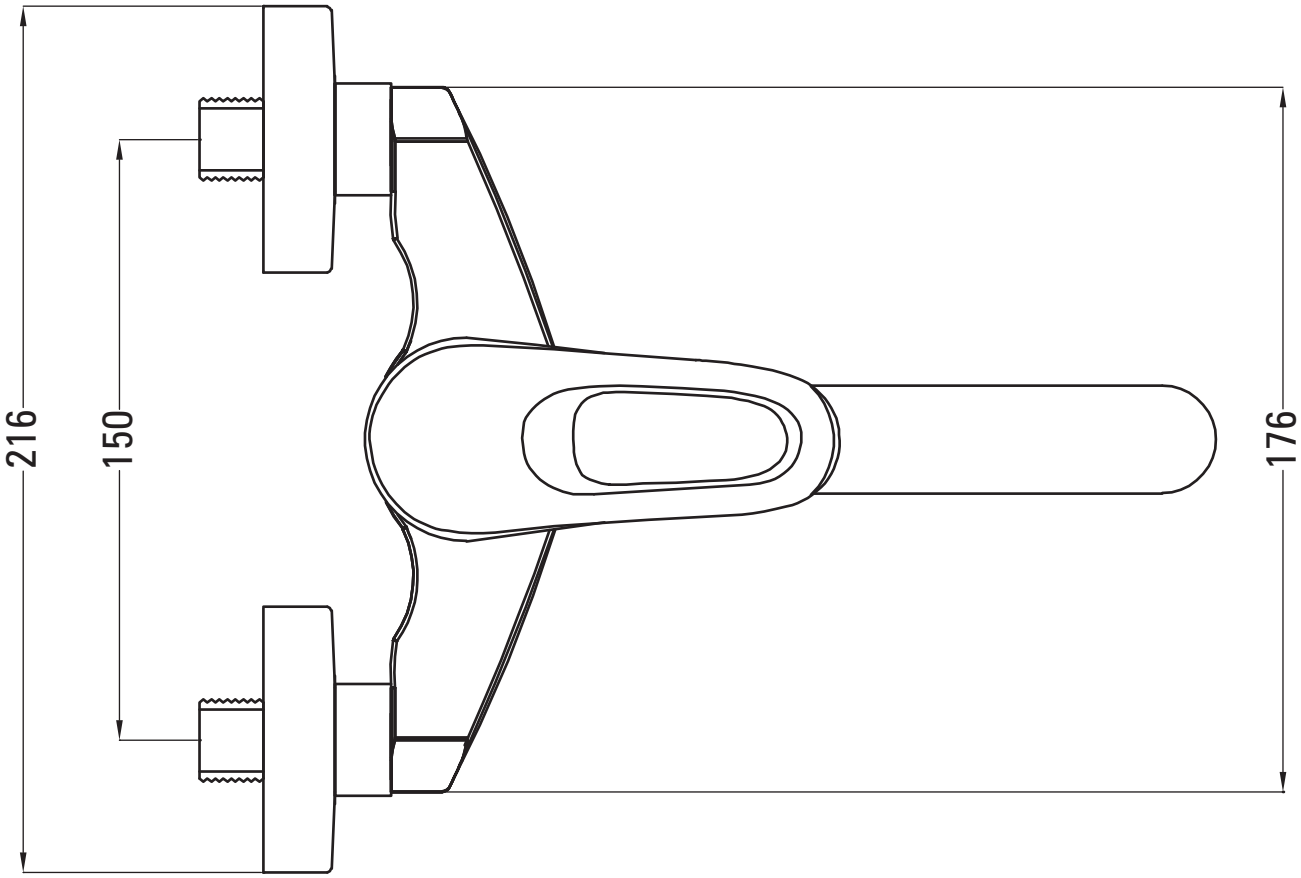
216
150
176